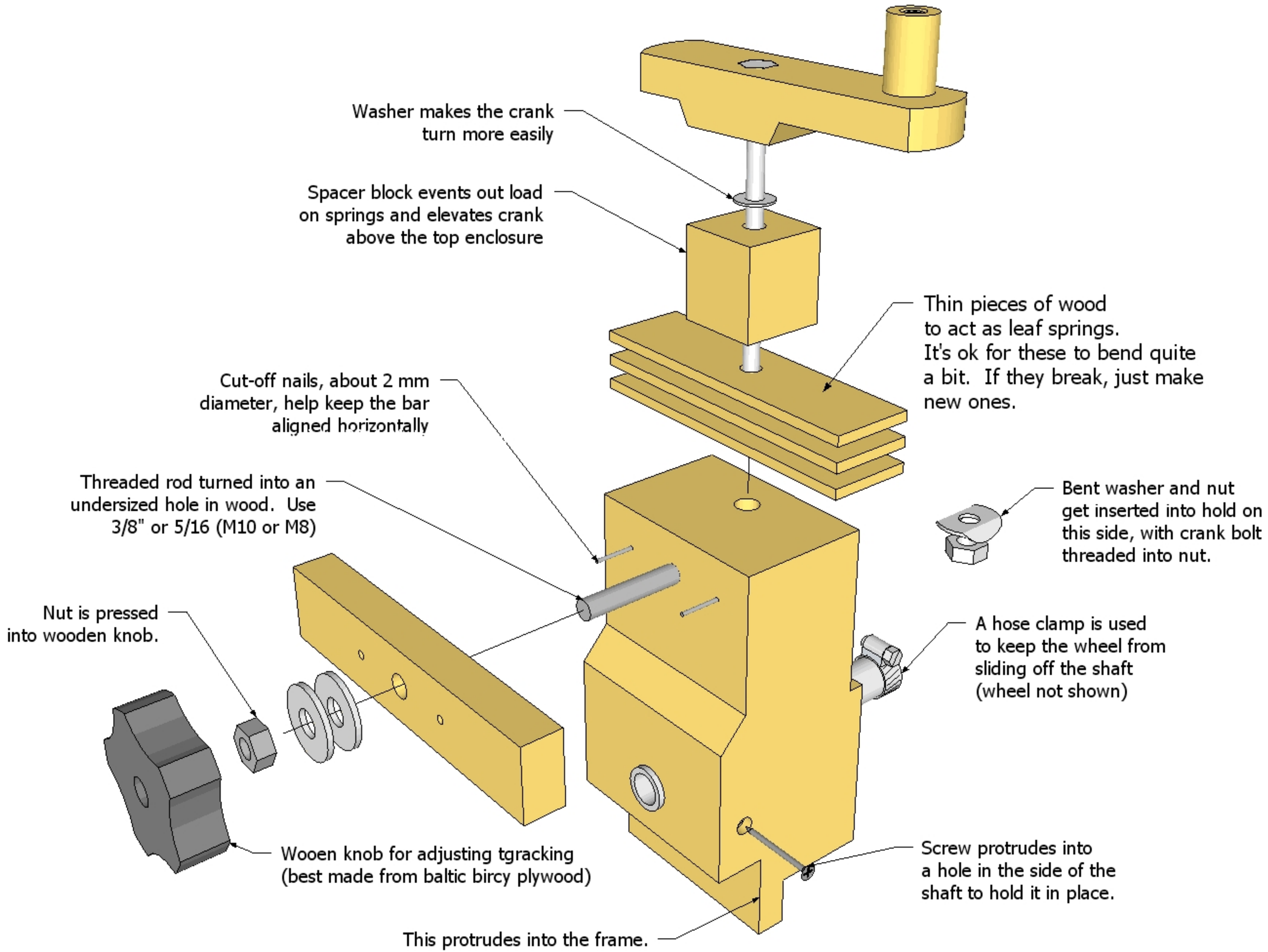Top wheelmount / tension assembly